1/29/13

SEDONA BY LYNX
L600 GRILL
WITH CABINET
DIMENSIONS SHOWN

TOP VIEW

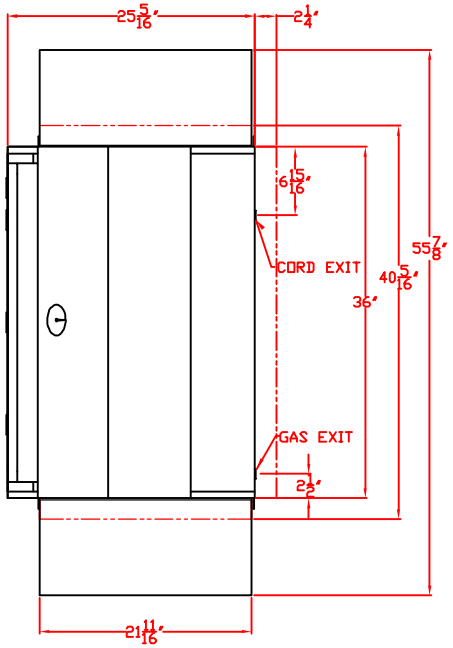

FRONT VIEW

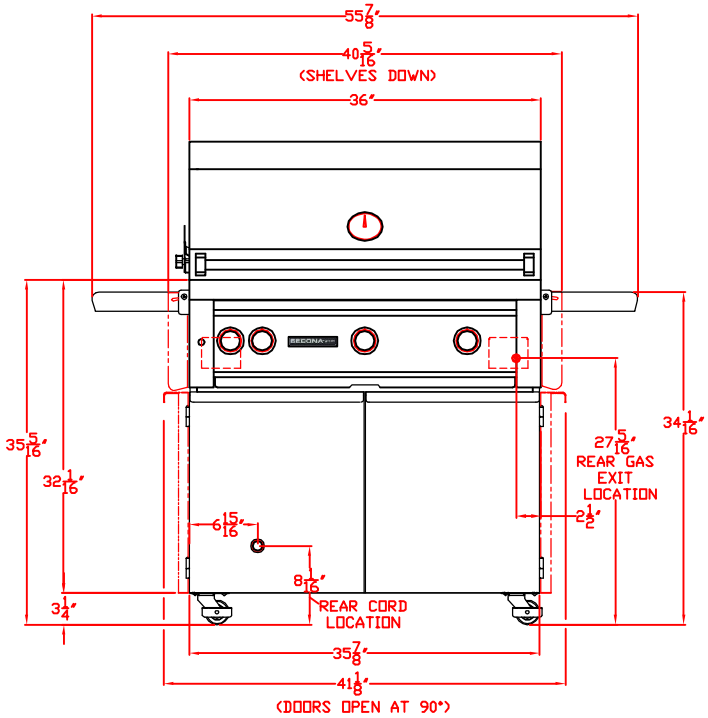
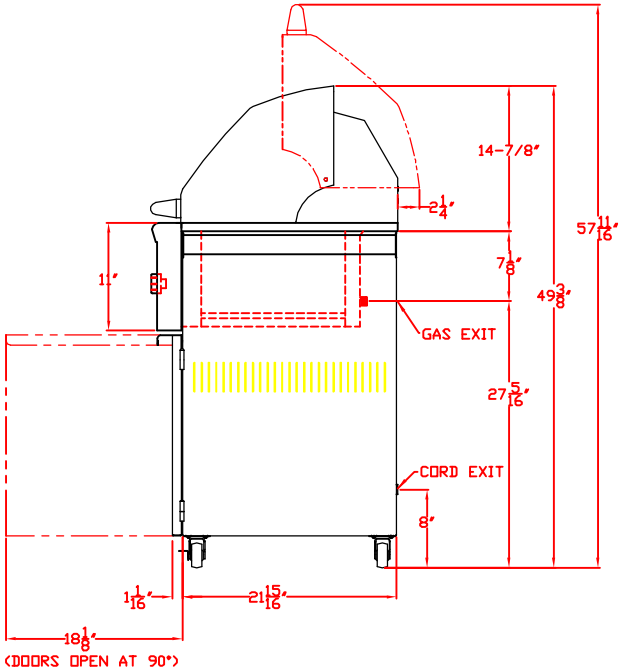
RIGHT SIDE VIEW